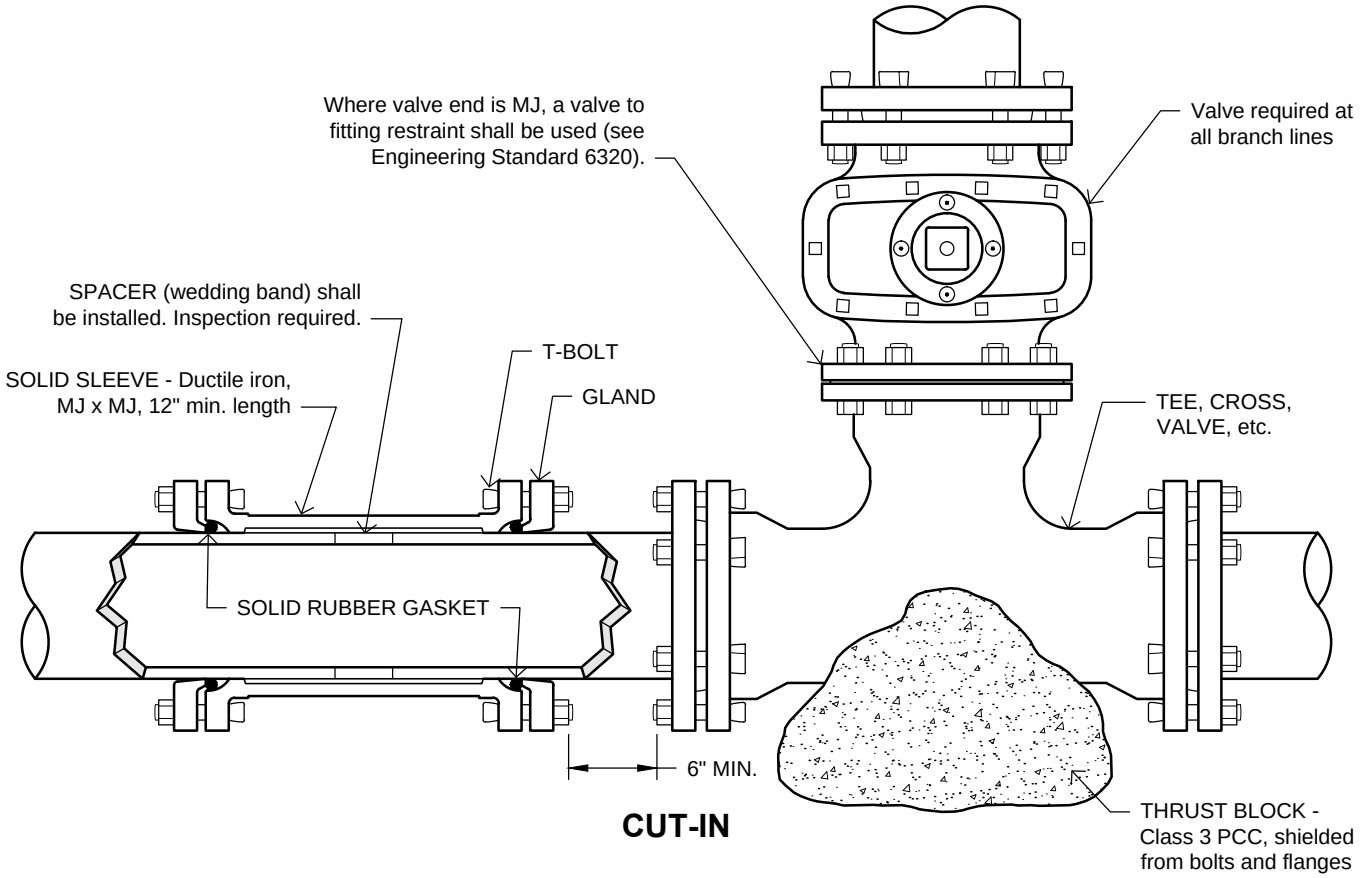

CUT-IN

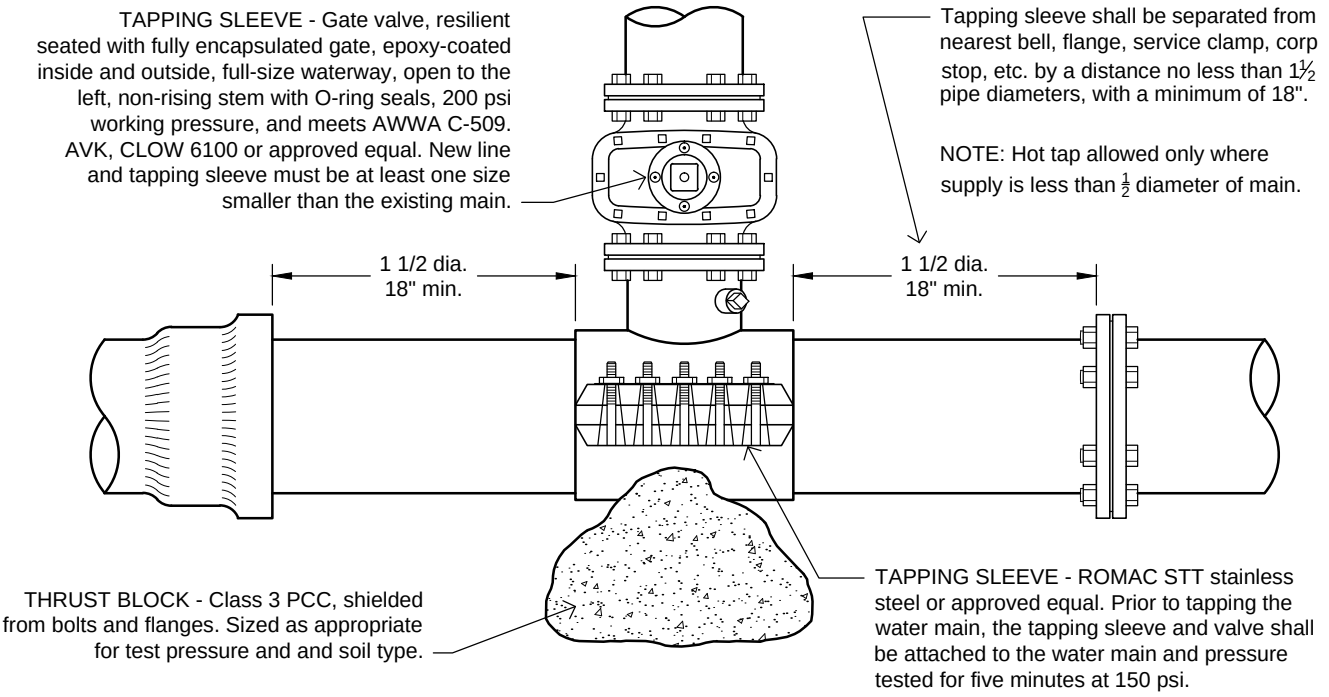

HOT TAP

SCALE: N.T.S.

STANDARD CURRENT AS OF: 01/20/2020	CAL POLY	**WATERLINE TIE-IN**
APPROVED BY: XX		
NOTES:		6330